SDCDUAL03

DAWLISH Shower Range

Dawlish Concealed Valve with Twin Integral Stopcocks
Deluxe Fixed Head and Flexible Kit Chrome

Specification

Finish/Colour:	Chrome Plated
Main Construction Material:	Brass
No of Controls:	3
Shower Type:	Recessed Dual Control
Shower Head Type:	Fixed Head & Single Function Handset
Shower Kit:	Rigid Riser with Fixed Head
Valve/Cartridge Type:	3/4" Ceramic Disc Valve - 1/4 turn
Maximum Hot Water Supply Temperature °C:	65
Plumbing System Suitability:	Suitable for all plumbing systems, ideally balanced
Minimum Dynamic Pressure (bar):	0.2
Maximum Dynamic Pressure (bar):	5
Maximum Static Pressure (bar):	10
Connection Inlet:	15mm Compression
Connection Outlet:	G 1/2"
Isolation Valve Included:	No
Check Valve Included:	Yes

Features:

- Optimised for UK market, designed to work at pressure range of 0.2 - 5.0bar
- Thermostatic temperature control and automatic stop prevent surges of hot or cold water
- Performance Flow to provide a drenching experience
- Smallest recessed valve on the market, will fit into a 35mm cavity space
- Large 6" shower rose

Product Certifications:

Unified Water Label 8 l/min

Dimensions (measurements in mm)

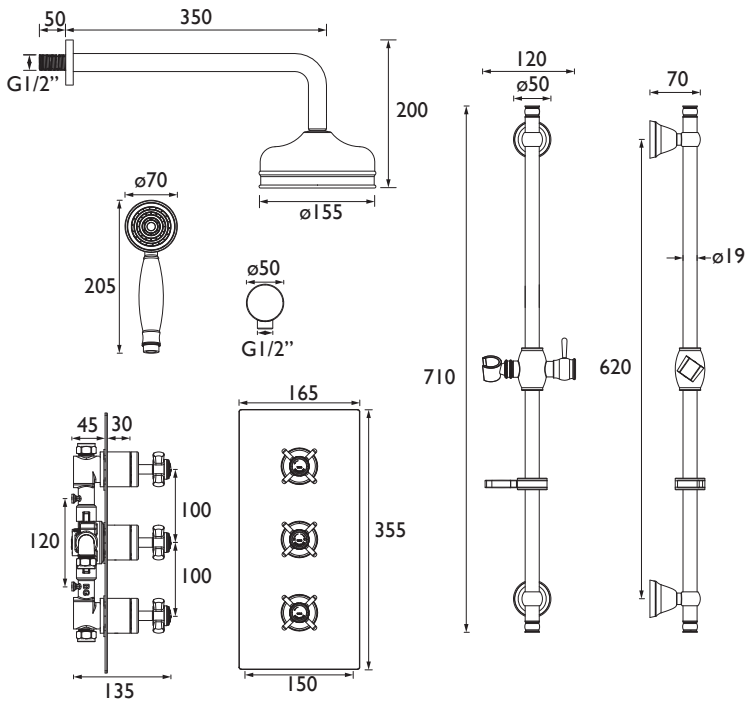

Additional Information:

Flow Rates (l/min)

System Pressure (bar)	0.2	0.5	1	2	3	5
Through Handset (mixed)	2	3.1	4.4	6.2	7.6	9.8
Through Fixed Head (mixed)	2.1	3.3	4.6	6.5	8	10.3

TECHNICAL DATA SHEET

5 YEAR GUARANTEE

HERITAGE® BATHROOMS

D5

Heritage Bathrooms, Birch Coppice Business Park, Dordon, Tamworth, B78 1SG. Telephone: 0330 026 8503. Web Site: www.heritagebathrooms.com Email: technical@heritagebathrooms.com.

***Non-chrome product finishes carry a 3 year guarantee on finish.** All of our products are covered by a guarantee. Most include both parts and labour. Please note that guarantees are only valid with a proof of purchase. Our guarantees apply to products in domestic use. Any products in commercial use carry a guarantee of 1 year. See www.heritagebathrooms.com/warranty for more information.
The information contained on this page was correct at date of issue. Fitting Dimensions are provided as a guide only. Some variation may occur due to manufacturing tolerances.
Heritage Bathrooms pursues a policy of continuous improvement in design and performance of its products and so reserves the right to change specifications without prior notice.