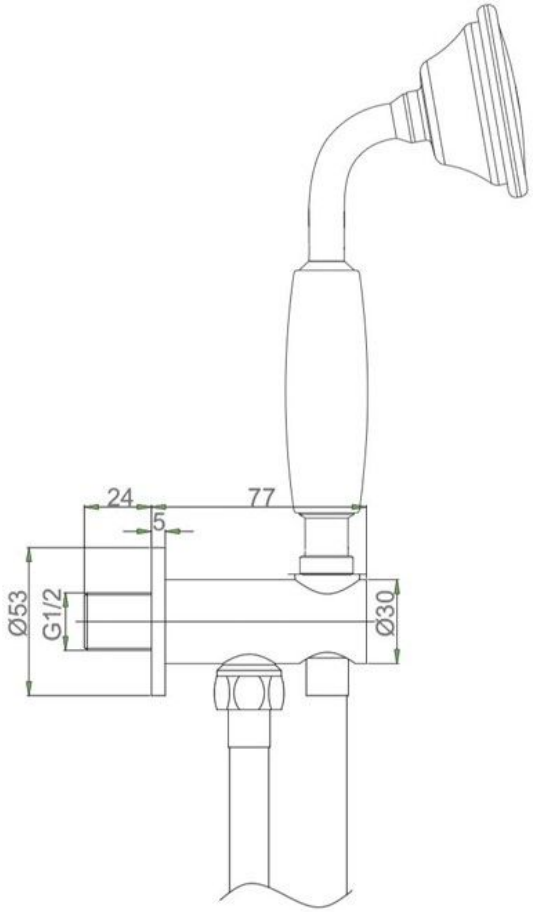
24
77
5
Ø53
G1/2
Ø30