Technical Data Sheet

Product range: VOS

Product code: 28368MB-23368BBR-27368BBL-21368BRZ

Finishes Available: Matt Black, Brushed Brass, Brushed Black, Brushed Bronze

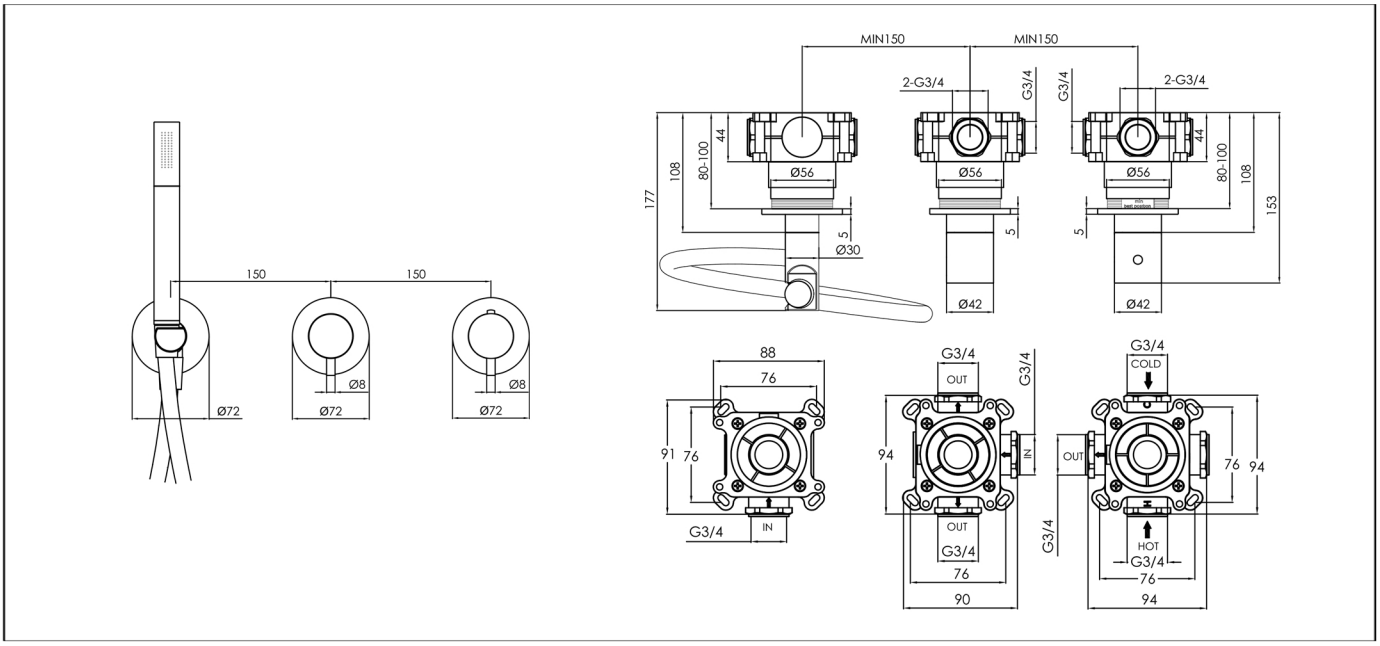

Min Pressure:
MP 0.5

Approvals:
WRAS

Connections:
G 3/4"

Warranty:
15 Years (5 on cartridges)

Flow Rate
Bath (Mix Water)
0.5Bar: 9.8L/min
1Bar: 15.7L/min
2Bar: 22.8L/min
3Bar: 28L/min

Flow Rate
Shower (Mix Water)
0.5Bar: 5.4L/min
1Bar: 7.9L/min
2Bar: 12L/min
3Bar: 15.5L/min